POLE MOUNT UNIT

39" OR 61 1/4" HEATERS

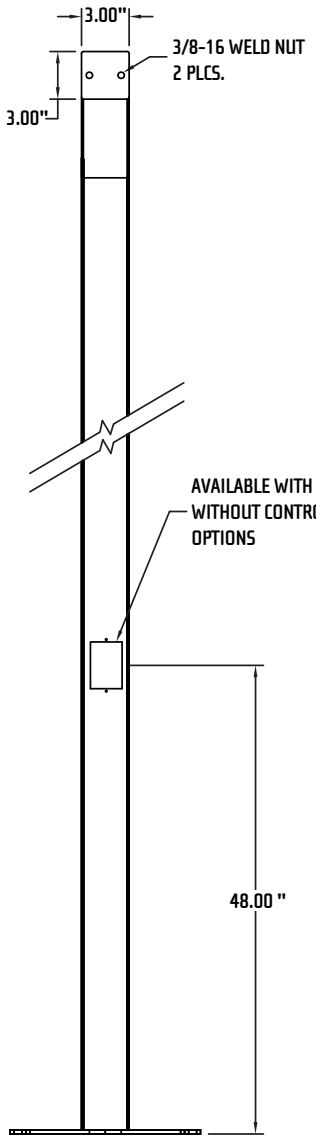

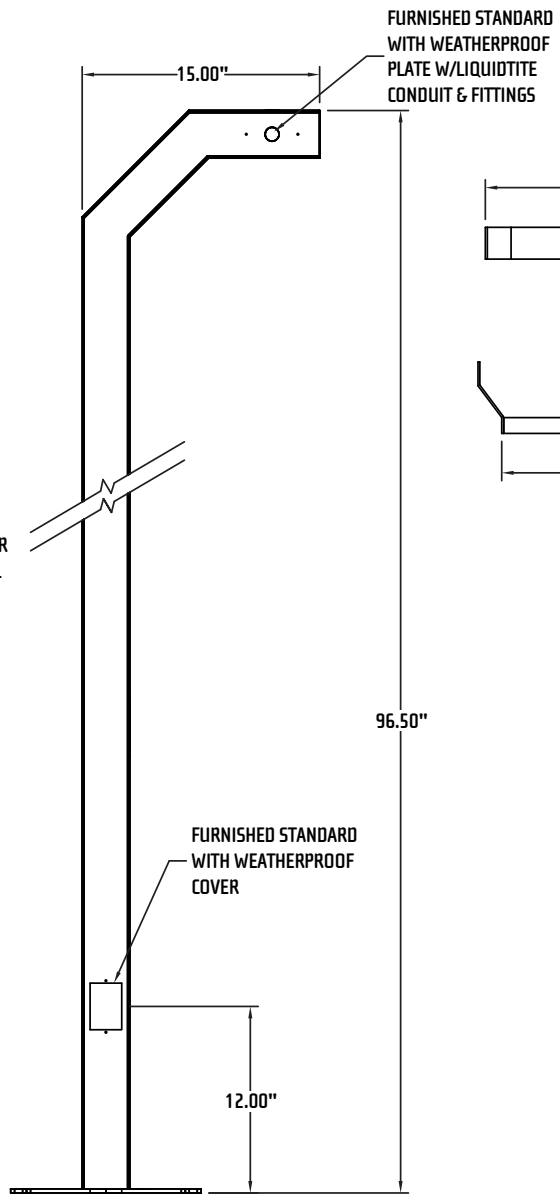

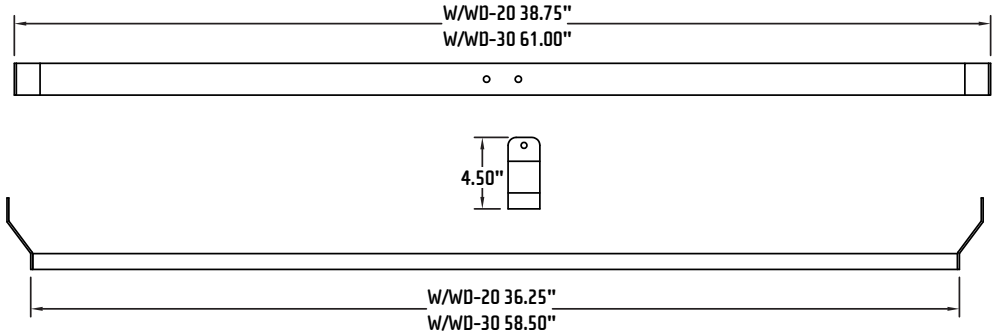

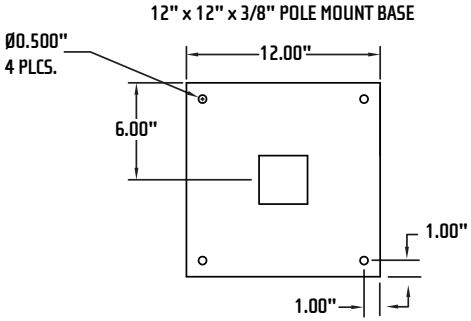

INFRATECH
COMFORT

344 W 157th Street | Gardena, CA 90248 TEL 800-421-9455 or 310-354-1250 FAX 310-523-3674
WWW.INFRATECH-USA.COM

SCALE: N/A
ITEM #: Call for item number